PROCEEDINGS, Thirty-Seventh Workshop on Geothermal Reservoir Engineering
Stanford University, Stanford, California, January 30 - February 1, 2011
SGP-TR-194

USE OF DOWNHOLE MUD-DRIVEN HAMMER FOR GEOTHERMAL APPLICATIONSC.

Catalin Teodoriu

TU Clausthal,
Agricolastr. 10
Clausthal-Zellerfeld, 38678, Germany
e-mail: catalin.teodoriu@tu-clausthal.de

ABSTRACT

Maintaining a good rate of penetration (ROP) in hard rock formation is a key challenge posed by deep geothermal wells to the drilling industry. This challenge is crucial; as well costs depend on the ROP and on the ability to keep the bit on bottom for an extended period of time.

This paper describes the basic principle of a hammer drilling tool developed at the Institute of Petroleum Engineering, TU Clausthal, and focuses on the lessons learned through laboratory investigations. The tool was extensively tested and the results are promising. Field tests have shown the efficiency of the hammer, but also the intense vibrations induced during drilling through hard formations.

A large number of computer simulations of the hammer's performance were run, resulting in more than four PhD and MS theses. As a result, it was found that the vibrations are not produced by the hammer itself, but they result from the energy reflection during rock-bit interaction. The last testing campaign focused on high frequency sampling of acceleration and piston movement. The results led to a better characterization of the source of vibrations as well as of the hammering process itself.

INTRODUCTION

Since the turn of the twentieth century, rotary drilling has been the dominant technique for well construction in the oil and gas industry. According to a study conducted by the Gas Technology Institute (GTI) in 1995, 50 % of the well production time is spent on making the hole, 25 % on tripping, and the rest of 25 % on casing/cementing.

The conventional "Rotary Drilling Technology" is defined by the Society of Petroleum Engineers in their "Advanced Drilling Engineering" Textbook as: "The hole is drilled by rotating a bit to which a downward force is applied. Usually, the bit is turned by rotating the entire drill string" (many joints of steel alloy), "using in general a rotary table at the surface, and the downward force is applied to the bit by using sections of heavy-cylinders, called drill collars, in the drill string above the bit. The cuttings are lifted to the surface by circulating a fluid down the drill string, through the bit, and up the annular space between the hole and the drill string." (Bourgoyne et al. 1986). This definition will be used in the following paper as reference to hammer drilling process.

Hammer drilling is a drilling method that uses the energy of a moving hammer (hammering action, percussion drilling) to increase apparently the weight on bit through shocks. Han, Bruno and Lao (2005) showed an example in which a $8^{3/4}$" bit require a WOB of 4.5 tons in case of hammer drilling and at least 18.5 tons while rotary drilling to achieve same ROP. This technique can increase the ROP in hard rock formations. Several down-hole hammer tools are commercially available for drilling deep wells. However, most of the tools with excellent results reported in the literature are designed for air drilling, since a clean fluid is required for hammer driver. Hammer drilling has shown an improvement of the drilling rate by a factor of 2 to 3, depending on the formation.

A large number of papers and patents describing variations of hammer drills with rotary hammer tools driven by drilling mud have been published to date. However, the outcomes of the projects on hammer drilling have not yet convinced the drilling industry to commonly use them for hard rock applications. Tests on downhole hammer tools (DHT) in Germany's continental deep drilling project (KTB) showed great improvements of ROP, but were accompanied by many other problems like downhole tools failure due to vibrations.

The main disadvantages of DHT are mechanical failure of the tool or the bottom hole assemblies and problems when drilling through shale (cave in problems). Little is known about the performance of hammer drilling in directional or horizontal wells, or slim hole drilling (Han, Bruno and Lao, 2005). There are not enough field results to date to support the

application of percussion hammers for continuous drilling of long well sections, especially to make reliable prediction of their wear. The main known problems when using hammer drilling for deep wells are vibrations, reliability, rock adaptability and the adequate drilling process control and prediction.

This paper describes the basic principle of a new downhole hammer and will focus on the lessons learned using a laboratory investigation of a hammer drilling tool at the Institute of Petroleum Engineering. The paper will present the construction, experimental investigations and the results of the measurements obtained during several years of intensive testing.

MUD DRIVEN DRILLING HAMMER

From the beginning of oil well drilling, percussion drilling methods have been used. Cable drilling for example achieved its perfection through its high frequency cable drilling rig ("The rapid impact drilling rig No. 7") introduced by Anton Racky in 1894. Because of its convenience Rotary drilling took over the market, while hammer drilling (air or mud driven) have been considered when deeper wells, harder formations or new challenges have been encountered.

Various hammer systems have been proposed during the years but, generally their design failed under conventional wellbore conditions. The following aspects should be here considered:

- oil, gas and geothermal wells are generally small diameters ranging from 7" to 12 ¾" for the last two sections.
- Drilling mud is mandatory for drilling deep wells in order to solve the cutting transport problems.
- Deeper the well higher the temperature will be, making complex equipment to fail

Most of the drilling hammers have shown excellent results when tested with air or clear water, but the presence of impurities or drilling mud dramatically reduced their life time.

The Institute of Petroleum Engineering (ITE) has developed a downhole hammer capable to work with drilling mud (see Figure 1). Several articles and papers fully describing the development of the hammer have been published. The "ZW-1 Bohrhammer" is a drilling mud driven hammer. Its function is based on the "water hammer" effect, which is positively used to accelerate the piston. The ZW1 hammer is flow rate driven; meaning that it will start working only after a certain flow rate is achieved. This can be an advantage for the DHT when drilling through heterogenic formations, as to allow stopping the hammer function when not needed, hence switching to rotary mode. Various studies have noted the importance of simultaneous hammering and rotating drilling (Han, Bruno and Lao, 2005)

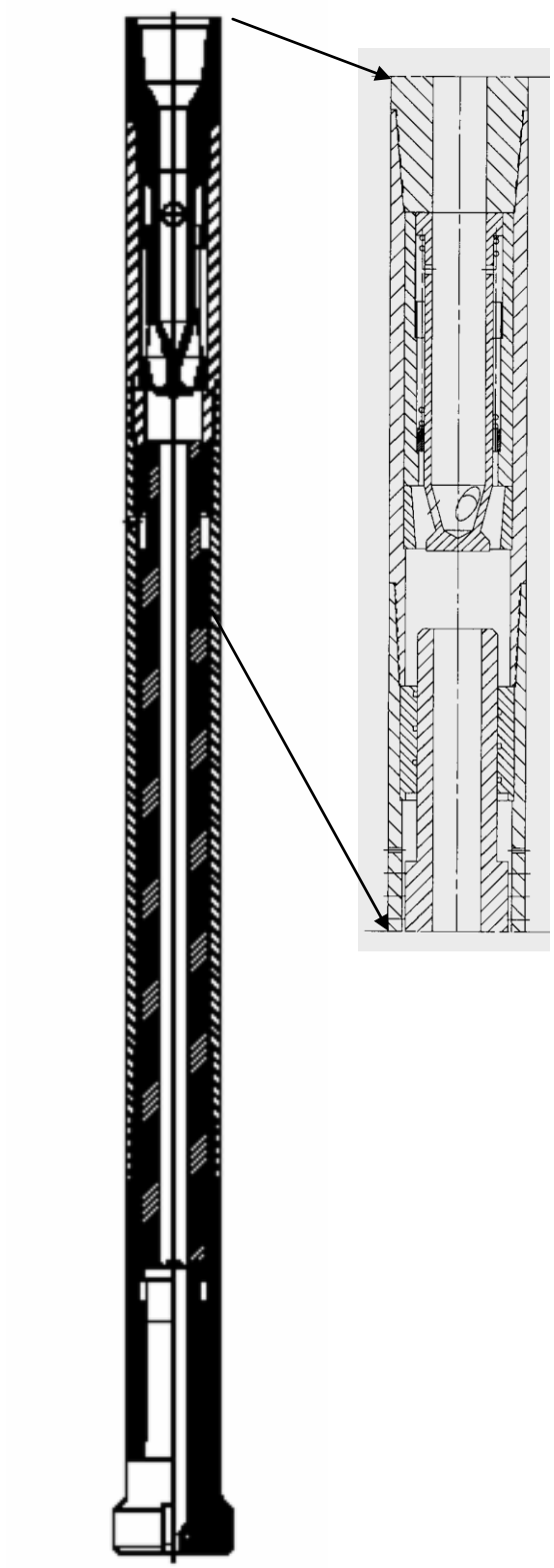

Figure 1. The ZW1 Drilling hammer

Constructively the hammer has only three movable parts: the hammer piston, the control valve and the regulating spring. All these parts are made of steel or, for the future, can be made of wear resistant materials like tungsten carbide or special coated steels for the valve manufacturing.

The actual size of the ZW1 hammer has a diameter of 4 ¾" and can drive a bit with a diameter of 6". The energy of the existing hammer is 300 J at 1000 L/min and achieved a maximum of 440 J at 1200 L/min after optimization. The size of the hammer makes it an excellent choice for deep drilling applications.

Because of its constructive characteristics we believe that the hammer is suitable for geothermal well applications since no temperature sensitive elements are incorporated in its construction and the system can be driven by conventional drilling mud. Its constructive design allows an adaptation of the impact energy and frequency by changing the valve geometry and the regulating spring. As a result of this, the pump rate at which the hammer will start working can be modified, as well as the frequency. This can be useful for field application when frequency adaptation between hammer and the bottom hole assembly is required.

The key in using a downhole tool is first of all to understand its behavior under field conditions. Han, Bruno and Lao (2005) mentioned that the one of the critical issues yet not solved is lack of simulation tools that can provide reliable information for hammer optimization. Therefore the mathematical simulation of a hammer is necessary, and the new hammer concept was intensively modeled by Zhao (1998). Its results showed that:

- the simulated and measured results are in good accordance with a maximum deviation of 15%. Both hammer frequency and hammering energy were simulated.
- Through simulation an optimization of the hammer was possible. The hammer was driven with 1200 l/min mud producing 440 J at a hammer frequency of 27 Hz.

Figure 2 shows the simulations results (upper graph) and the measured data (lower graph). The piston displacement and inlet pressure have a good correspondence. The laboratory measurements however have revealed a second pressure peak which could not be entirely mathematically modeled. The mathematical model shows a second pressure peak but its magnitude is higher than the one measured. This could be explained by cavitations effects that take place below the valve at the moment the valve is separated from the piston.

As presented above, the numerical simulation of the hammer allow a much detailed optimization. Figure 3 summarize according to Zhao (1998) the main geometrical parameters used to control the hammer. As it can be seen in this picture the constructive concept does not require small holes or valves that can be plugged by solids contained by the mud or areas where high wear may occur.

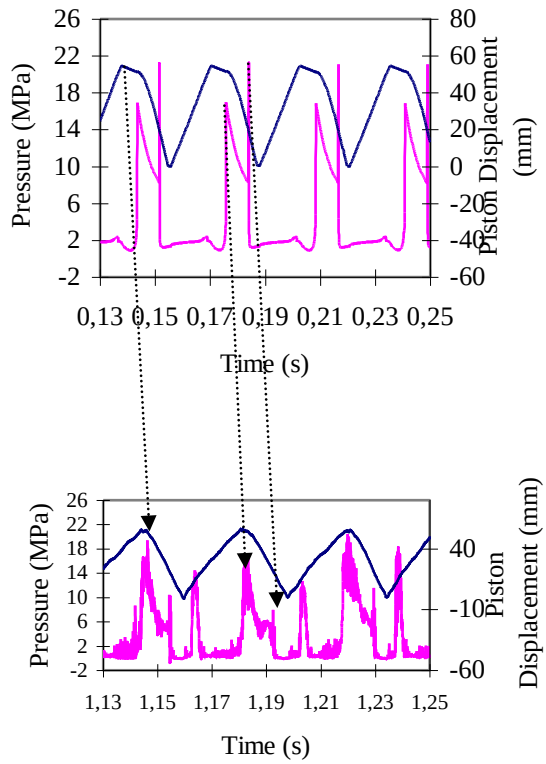

Figure 2. Simulation of the drilling hammer, after Zhao (1988)

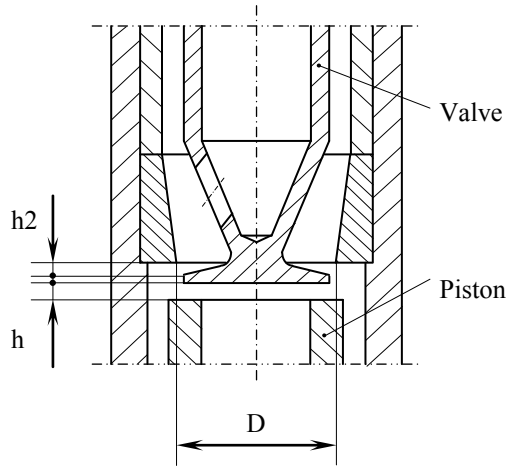

Figure 3. Detailed view of the valve geometry and the main control parameters, after Zhao (1988)

HIGH FREQUENCY MEASUREMENT CAMPAIGN

The main concern of using a downhole hammer tools in drilling through hard formations remains the induced vibrations and their transmissibility to the drill string (Han, Bruno and Lao, 2005, Kong, Marx and Palten, 1996). In order to better understand this phenomenon a new laboratory campaign was started with the aim of measuring the vibrations using high frequency data and find a way to isolate the vibrations. Same testing facility as the one used by Zhao in 1998 has been used, see figure 4. The rock was mimicked by a steel block, which results in a much higher intensive vibration response. The data acquisition system was this time upgraded with a high frequency pressure gauge and one accelerometer. The entire measurement chain allows sampling rates up to 500 kHz.

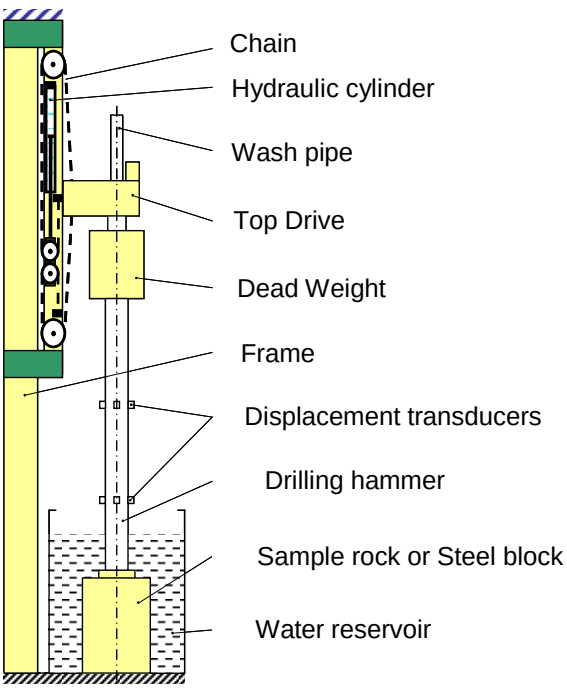

Figure 4. Description of the drilling hammer testing stand

The accelerometer was attached to the hammer just above the lower displacement transducers, see figure 5. Through this we could also observe the moment the piston is passing by the accelerometer, as is shown in figure 6 position 3.

The high sampling rate measurements using the accelerometer have indicated a series of reflections that appear at the lowest position of the hammer, after the impact between piston and anvil. Once again the measurements have shown the existence of two peaks in the system, see figure 6: one peak is the water hammer effect that produces the piston movement (position 2) and a second one much larger in amplitude which is produced by the piston impact, followed by amortized reflections (position 1).

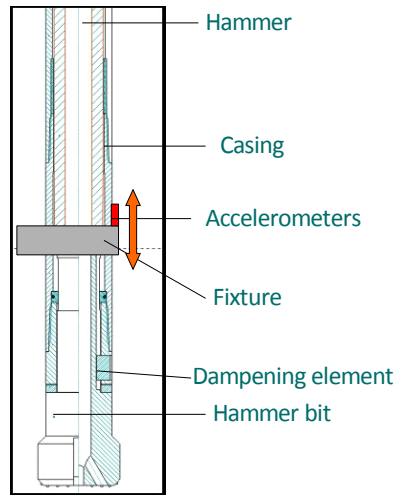

Figure 5. Position of the accelerometer on the ZW1 Hammer

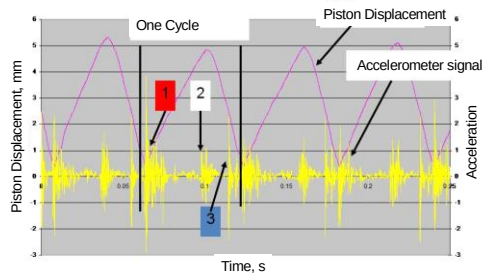

1 Reflection 2 Water hammer 3 Piston crossing the accelerometer position

Figure 6. Representation of piston displacement versus high frequency acceleration measurements

A time domain representation of the measurements reveled free vibrations of the entire systems, see figure 7. We also observed that no resonance effects exist in the system.

Since the measured frequency differs from hammer own frequency (27 Hz) we conclude that the vibrations of the entire system are not produced directly by the hammer, but more as reflected by the formation back to the hammer. This result can be differently interpreted. Zhao (1998) wrote that rock formations will reflect less vibrations than the metal block which then result in far less vibrations of the bottom hole assembly as those observed in our testing stand.

Softer (plastic) formations may absorb hammer energy, thus resulting in a low efficiency of the hammer.

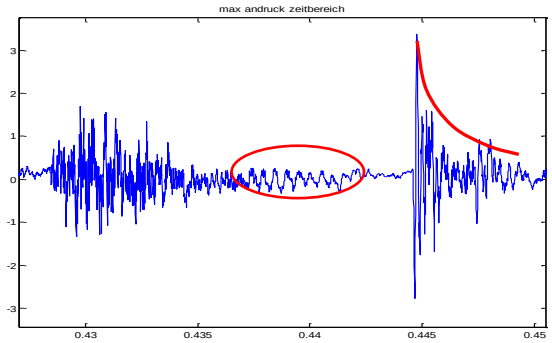

Figure 7. Time domain representation of the accelerometer measurements

CONCLUSIONS

Percussion drilling will boost the rate of penetration for hard formation.

Deep drilling requires mud driven hydraulic hammers with high wear resistance and reliability.

The ITE ZW1 hammer has a minimum of moving parts and can work under high temperature conditions since no elastomers are involved.

Numerical modeling of the ZW1 hammer allowed its optimization, the simulation program offering reliable estimation of the hammer capabilities.

The new developments in data acquisition and measurement techniques can contribute to optimize the existing hammer and allow for a full scale test.

We found out that most of the vibrations induced in the system are produced by the reflections from formation toward to hammer and not by the hammer function itself.

ACKNOWLEDGMENTS

I want to thank to all that made possible the development of the ZW1 Drilling hammer: Prof. Claus Marx, Dr. Michael Koppe, Dr. Zhao, Karl-Eduard Winter, and the wonderful ITE workshop team.

REFERENCES

Bourgoyne A.T. Jr., Chenevert M.E., Millheim K.K. and Young F.S. Jr. (1986): Applied Drilling Engineering, Society of Petroleum Engineers, Richardson, TX

Guangzhuo Zhao (1998): Entwicklung und Optimierung eines hydraulischen Bohrhammers, PhD. - Clausthal-Zellerfeld: Papierflieger

Han, G., Bruno, M., Lao, K. (2005): Percussion Drilling in Oil Industry: Review and Rock Failure Modeling, AADE 2005 National Technical Conference and Exhibition, Houston, Texas, April 5-7.

Kong, J., Marx, C., and Palten, P.J. (1996): “Mathematical Simulation of A Spring-Free Hydraulic Drilling Hammer and Verification of the Results by Experiment”, Erdol Erdgas Kohle, v. 112, No.1, 19-25.

Kong, J. (1994): Mathematische Simulation eines hydraulischen Bohrhammers und Verifizierung der Ergebnisse durch Vergleich mit Meßwerten, PhD, TU Clausthal.